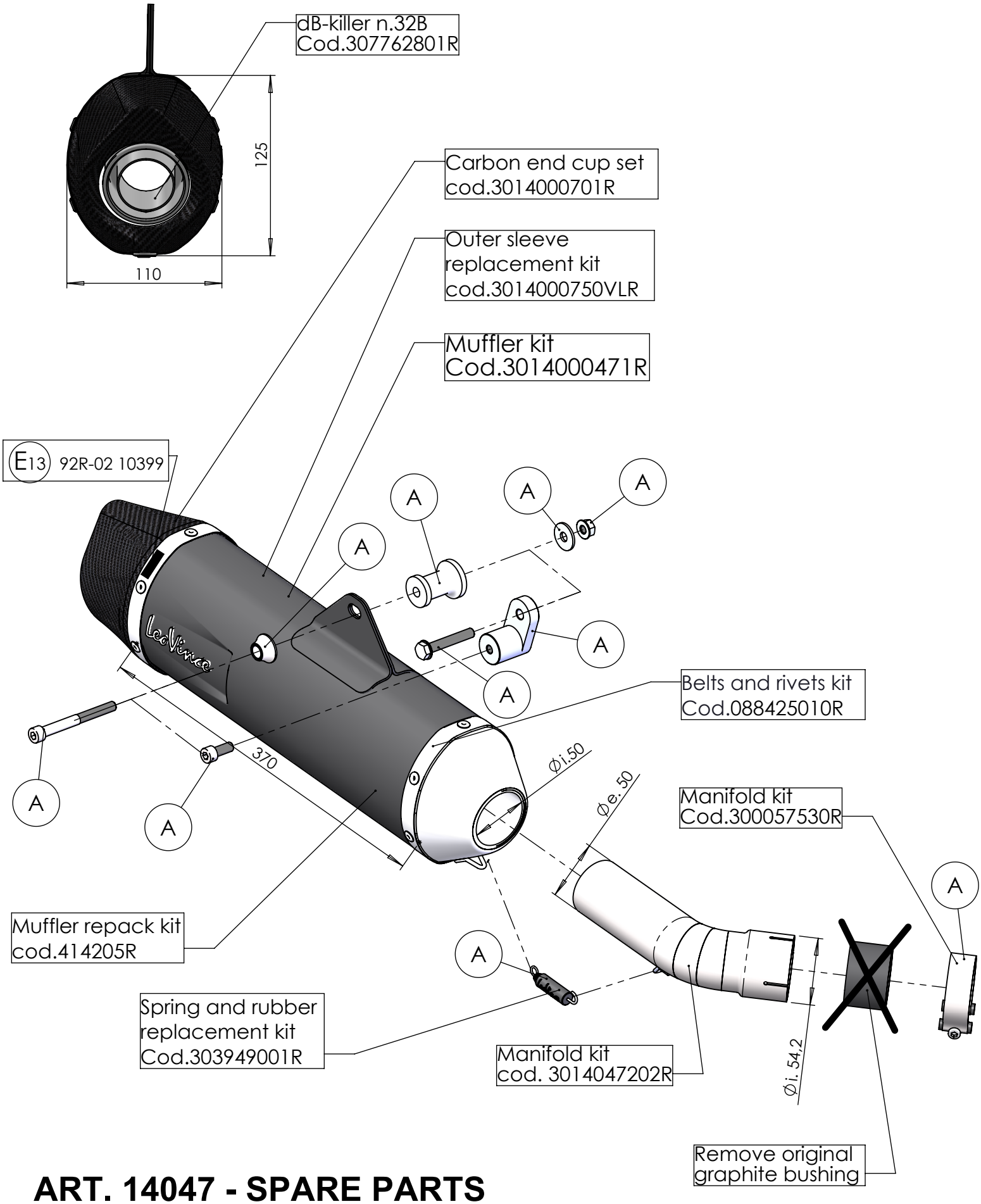

ART. 14047 - SPARE PARTS

SUZUKI V-STROM 1000 ABS / XT (fits with original panniers)

Ⓐ FITTING KIT cod.3014047601R